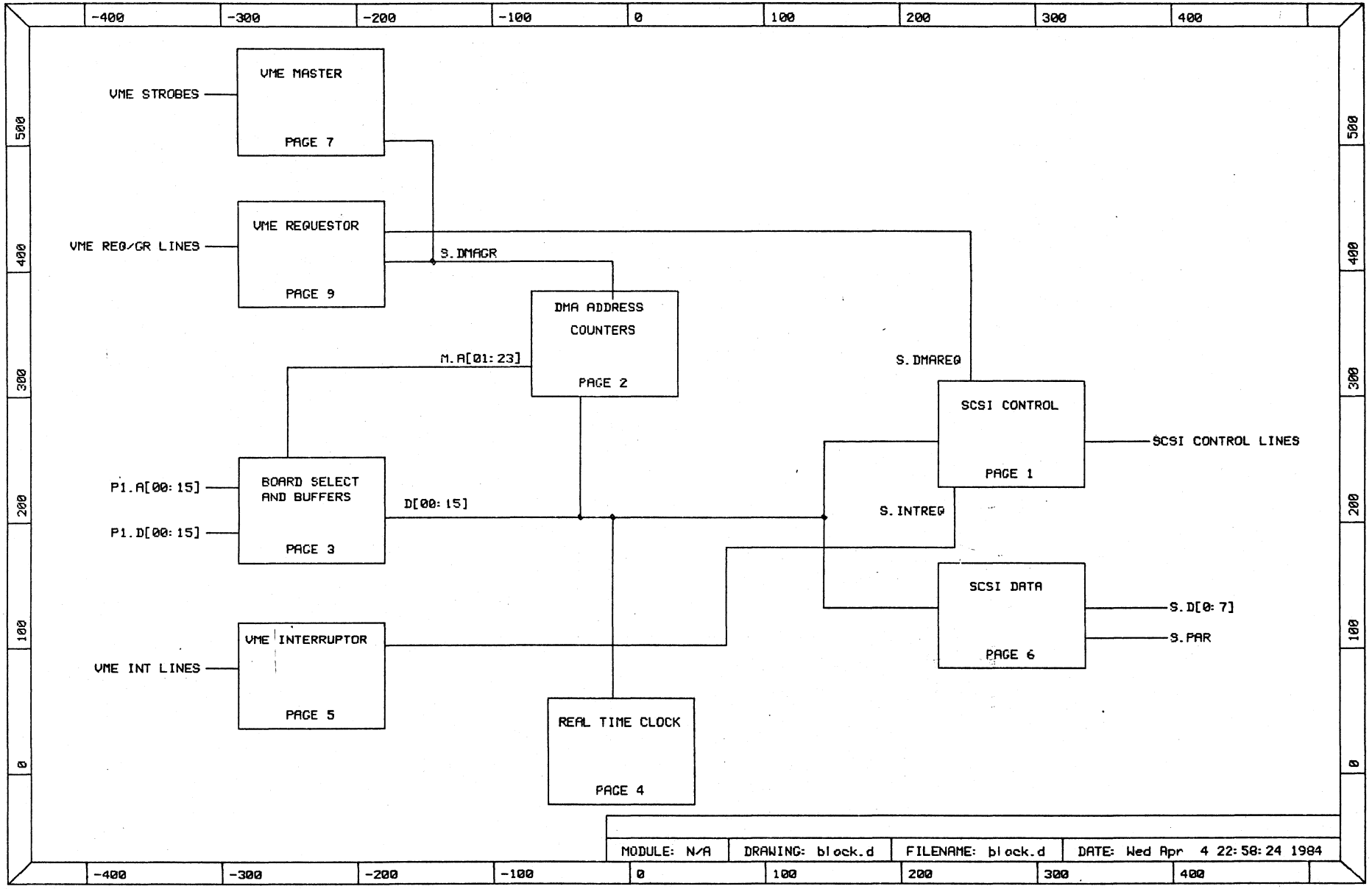
VME MASTER
PAGE 7
VME STROBES
VME REQUESTOR
PAGE 9
VME REQ/GR LINES
S.DMAGR
DMA ADDRESS COUNTERS
PAGE 2
M.A[01:23]
S.DMAREQ
SCSI CONTROL
PAGE 1
SCSI CONTROL LINES
BOARD SELECT AND BUFFERS
PAGE 3
P1.A[00:15]
P1.D[00:15]
D[00:15]
S.INTREQ
SCSI DATA
PAGE 6
S.D[0:7]
S.PAR
VME INTERRUPTOR
PAGE 5
VME INT LINES
REAL TIME CLOCK
PAGE 4
MODULE: N/A
DRAWING: block.d
FILENAME: block.d
DATE: Wed Apr 4 22:58:24 1984

871

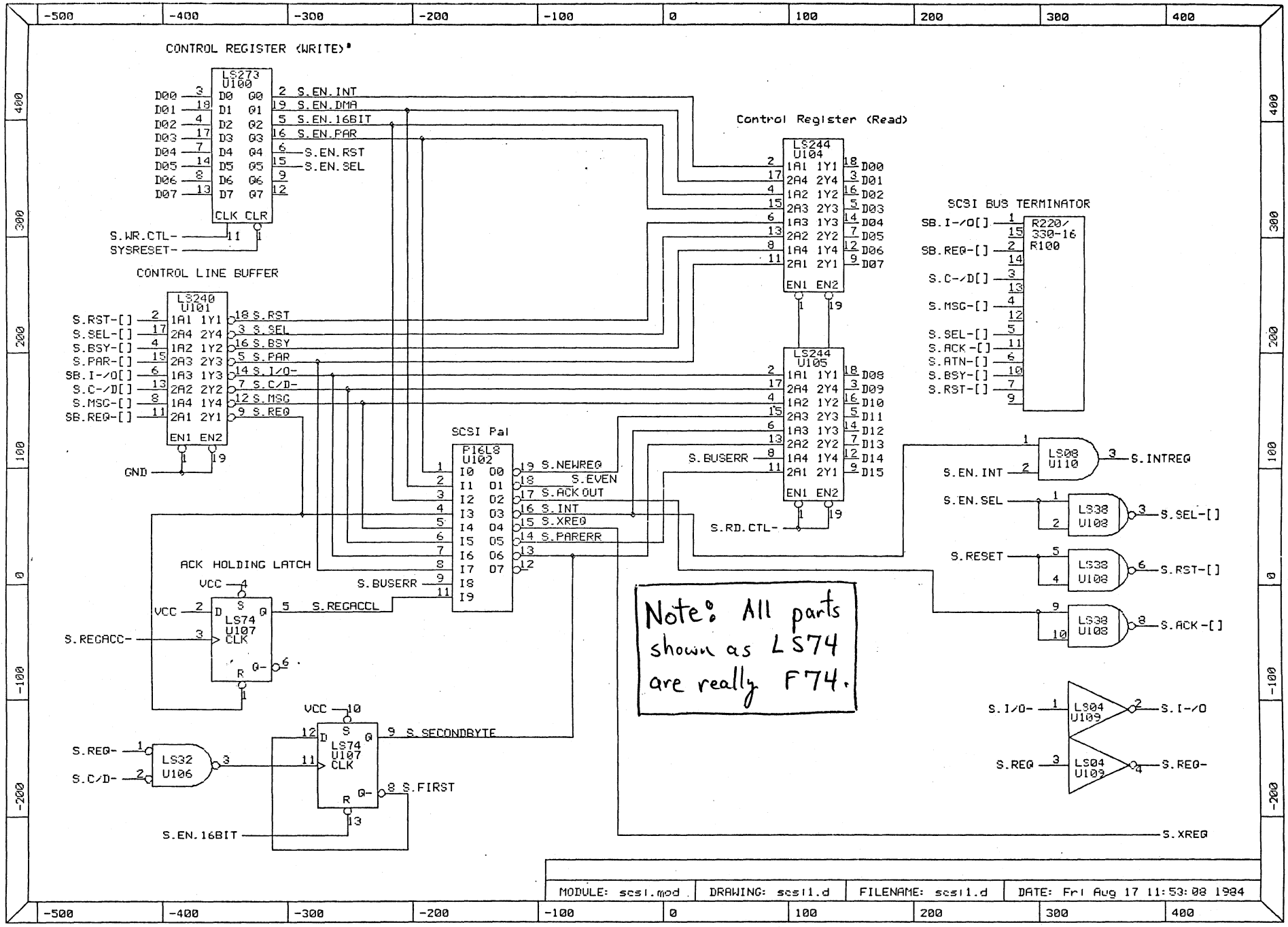
CONTROL REGISTER (WRITE)
LS273 U100
D00 D01 D02 D03 D04 D05 D06 D07
S.EN.INT
S.EN.DMA
S.EN.16BIT
S.EN.PAR
S.EN.RST
S.EN.SEL
CLK CLR
S.WR.CTL-
SYSRESET-
CONTROL LINE BUFFER
LS240 U101
S.RST-[]
S.SEL-[]
S.BSY-[]
S.PAR-[]
SB.I-/O[]
S.C-/D[]
S.MSG-[]
SB.REQ-[]
S.RST
S.SEL
S.BSY
S.PAR
S.I/O-
S.C/D-
S.MSG
S.REQ
EN1 EN2
GND
Control Register (Read)
LS244 U104
LS244 U105
D00 D01 D02 D03 D04 D05 D06 D07
D08 D09 D10 D11 D12 D13 D14 D15
S.BUSERR
S.RD.CTL-
SCSI BUS TERMINATOR
R220/330-16 R100
SB.I-/O[]
SB.REQ-[]
S.C-/D[]
S.MSG-[]
S.SEL-[]
S.ACK-[]
S.ATN-[]
S.BSY-[]
S.RST-[]
SCSI Pal
P16L8 U102
S.NEWREQ
S.EVEN
S.ACK OUT
S.INT
S.XREQ
S.PARERR
S.BUSERR
S.REGACCL
ACK HOLDING LATCH
VCC
LS74 U107
S.REGACC-
LS32 U106
S.REQ-
S.C/D-
S.SECONDBYTE
S.FIRST
S.EN.16BIT
LS08 U110
S.EN.INT
S.INTREQ
LS38 U108
S.EN.SEL
S.SEL-[]
S.RESET
S.RST-[]
S.ACK-[]
LS04 U109
S.I/O-
S.I-/O
S.REQ
S.REQ-
S.XREQ
Note: All parts shown as LS74 are really F74.
MODULE: scsi.mod
DRAWING: scsi1.d
FILENAME: scsi1.d
DATE: Fri Aug 17 11:53:08 1984

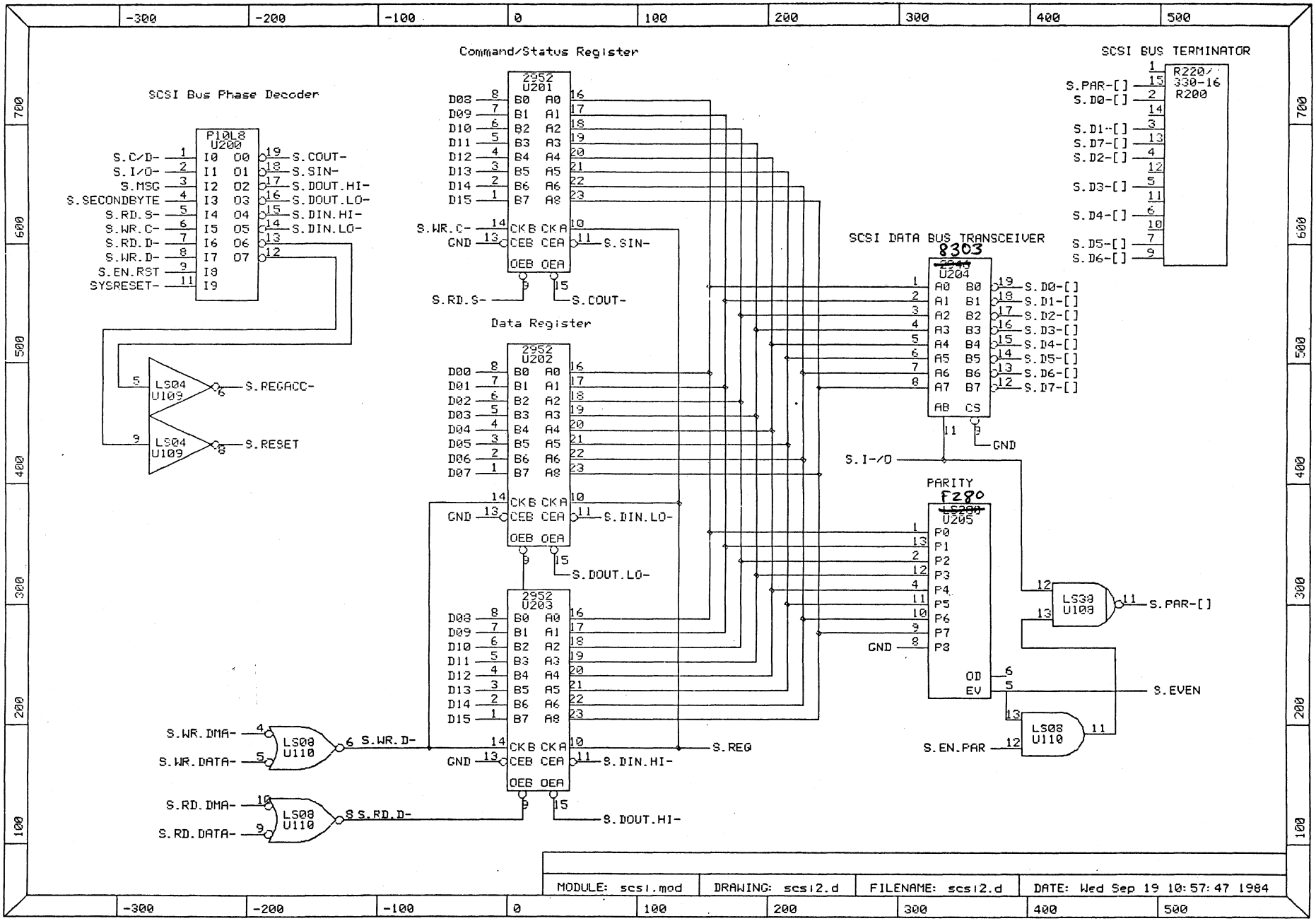
Command/Status Register
SCSI Bus Phase Decoder
SCSI BUS TERMINATOR
Data Register
SCSI DATA BUS TRANSCEIVER
8303
PARITY
F280
2952 U201
2952 U202
2952 U203
P10L8 U200
LS04 U109
LS08 U110
LS30 U109
R220/330-16 R200
S.C/D-
S.I/O-
S.MSG
S.SECONDBYTE
S.RD.S-
S.WR.C-
S.RD.D-
S.WR.D-
S.EN.RST
SYSRESET-
S.COUT-
S.SIN-
S.DOUT.HI-
S.DOUT.LO-
S.DIN.HI-
S.DIN.LO-
S.REGACC-
S.RESET
S.WR.DMA-
S.WR.DATA-
S.RD.DMA-
S.RD.DATA-
S.WR.D-
S.RD.D-
S.REQ
S.I-/O
S.EN.PAR
S.EVEN
S.PAR-[]
S.D0-[]
S.D1-[]
S.D2-[]
S.D3-[]
S.D4-[]
S.D5-[]
S.D6-[]
S.D7-[]
GND
MODULE: scsi.mod
DRAWING: scsi2.d
FILENAME: scsi2.d
DATE: Wed Sep 19 10:57:47 1984

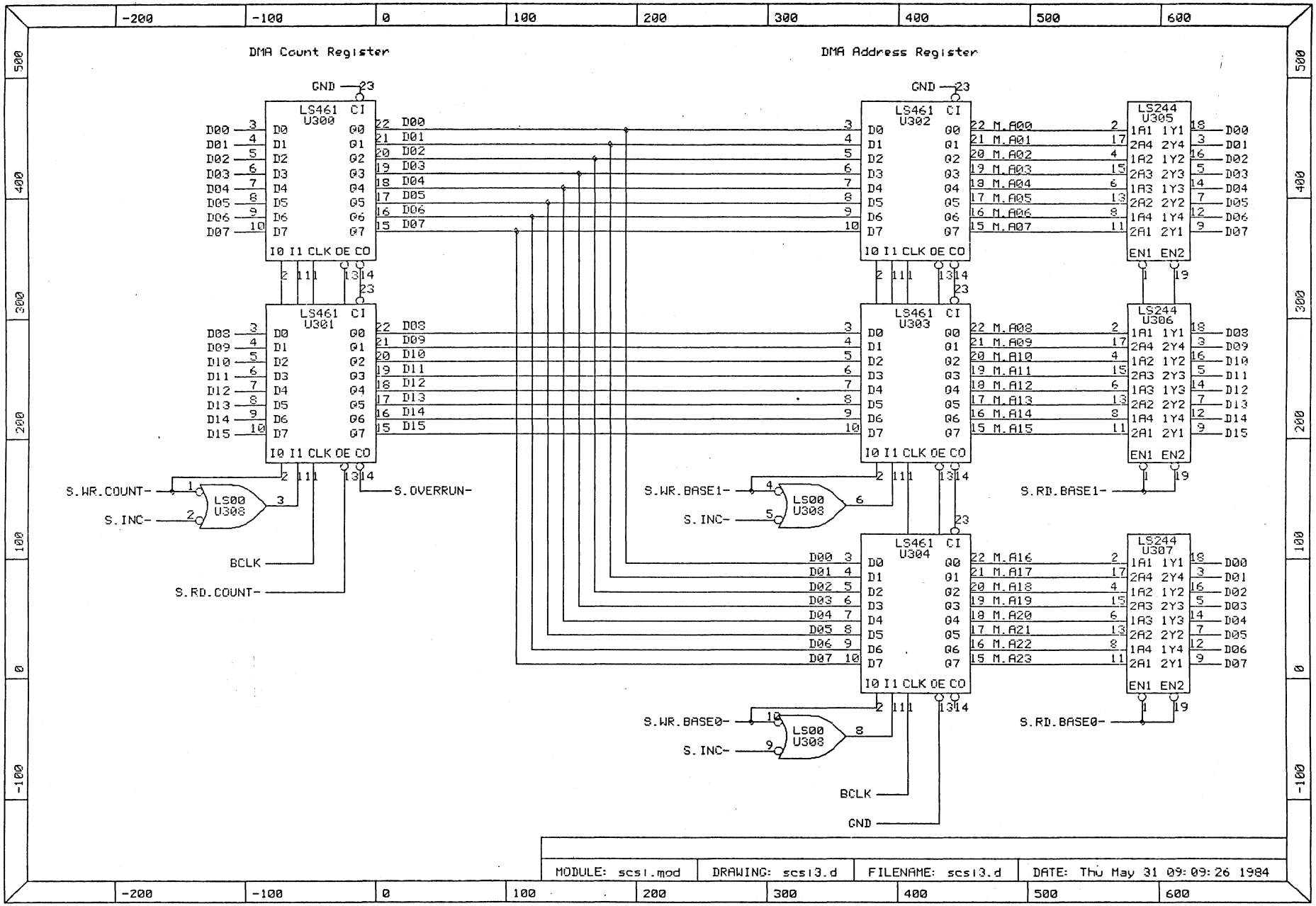
DMA Count Register
DMA Address Register
LS461 U300
LS461 U301
LS461 U302
LS461 U303
LS461 U304
LS244 U305
LS244 U306
LS244 U307
LS00 U308
GND
D00 D01 D02 D03 D04 D05 D06 D07
D08 D09 D10 D11 D12 D13 D14 D15
M.A00 M.A01 M.A02 M.A03 M.A04 M.A05 M.A06 M.A07
M.A08 M.A09 M.A10 M.A11 M.A12 M.A13 M.A14 M.A15
M.A16 M.A17 M.A18 M.A19 M.A20 M.A21 M.A22 M.A23
S.WR.COUNT-
S.INC-
S.OVERRUN-
S.RD.COUNT-
S.WR.BASE1-
S.RD.BASE1-
S.WR.BASE0-
S.RD.BASE0-
BCLK
MODULE: scsi.mod
DRAWING: scsi3.d
FILENAME: scsi3.d
DATE: Thu May 31 09:09:26 1984

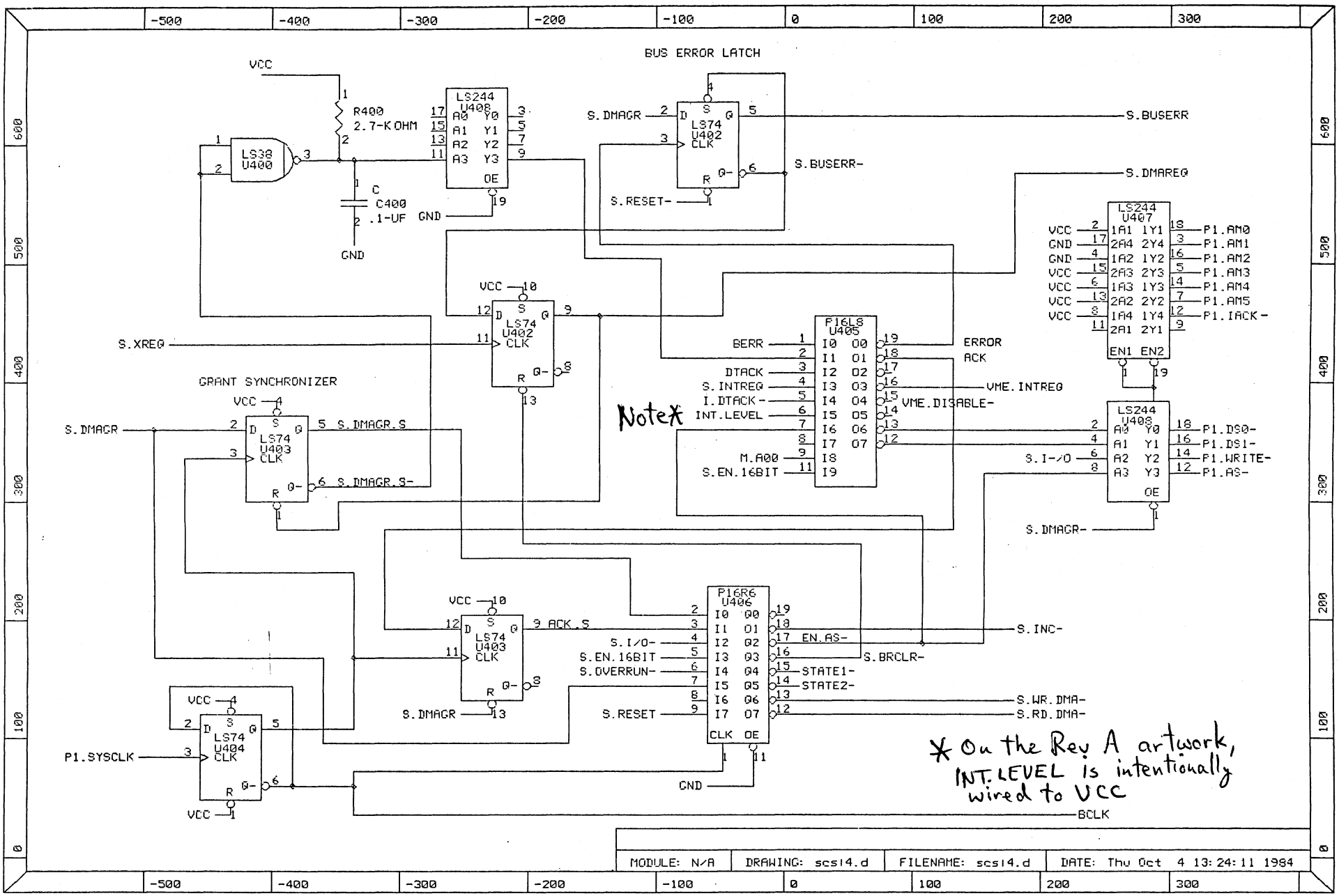
BUS ERROR LATCH
GRANT SYNCHRONIZER
VCC
GND
R400
2.7-KOHM
C400
.1-UF
LS38 U400
LS244 U408
LS74 U402
LS74 U403
LS74 U404
P16L8 U405
LS244 U407
LS244 U408
P16R6 U406
S.DMAGR
S.BUSERR
S.BUSERR-
S.RESET-
S.DMAREQ
S.XREQ
S.DMAGR.S
S.DMAGR.S-
ACK.S
BERR
DTACK
S.INTREQ
I.DTACK-
INT.LEVEL
M.A00
S.EN.16BIT
ERROR
ACK
VME.INTREQ
VME.DISABLE-
P1.AM0
P1.AM1
P1.AM2
P1.AM3
P1.AM4
P1.AM5
P1.IACK-
P1.DS0-
P1.DS1-
P1.WRITE-
P1.AS-
S.I-/O
S.DMAGR-
S.I/O-
S.OVERRUN-
S.RESET
EN.AS-
STATE1-
STATE2-
S.BRCLR-
S.INC-
S.WR.DMA-
S.RD.DMA-
P1.SYSCLK
BCLK
Note*
* On the Rev A artwork, INT.LEVEL is intentionally wired to VCC
MODULE: N/A
DRAWING: scs14.d
FILENAME: scs14.d
DATE: Thu Oct 4 13:24:11 1984

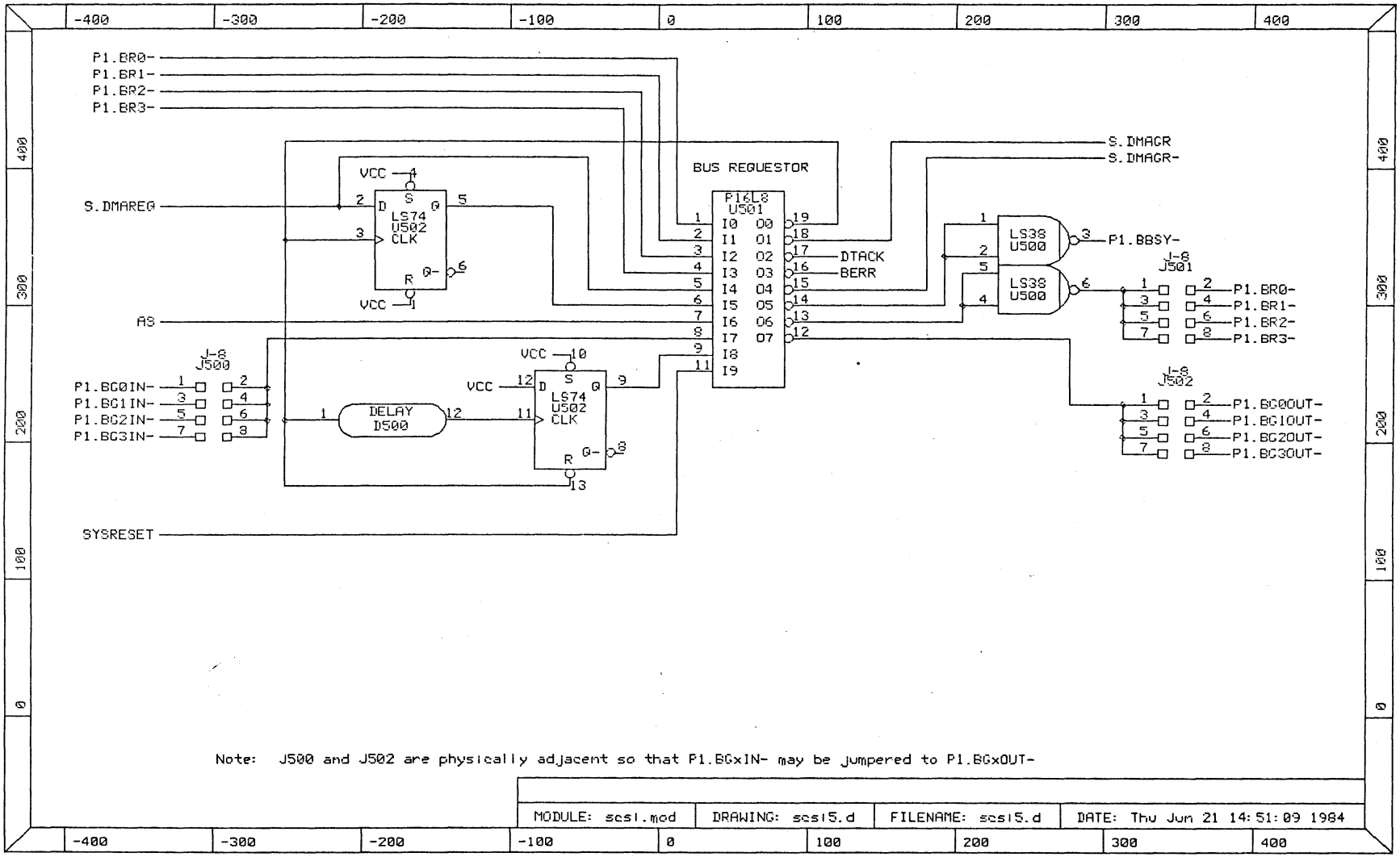

Note: J500 and J502 are physically adjacent so that P1.BGxIN- may be jumpered to P1.BGxOUT-

MODULE: scsi.mod	DRAWING: scsi5.d	FILENAME: scsi5.d	DATE: Thu Jun 21 14:51:09 1984

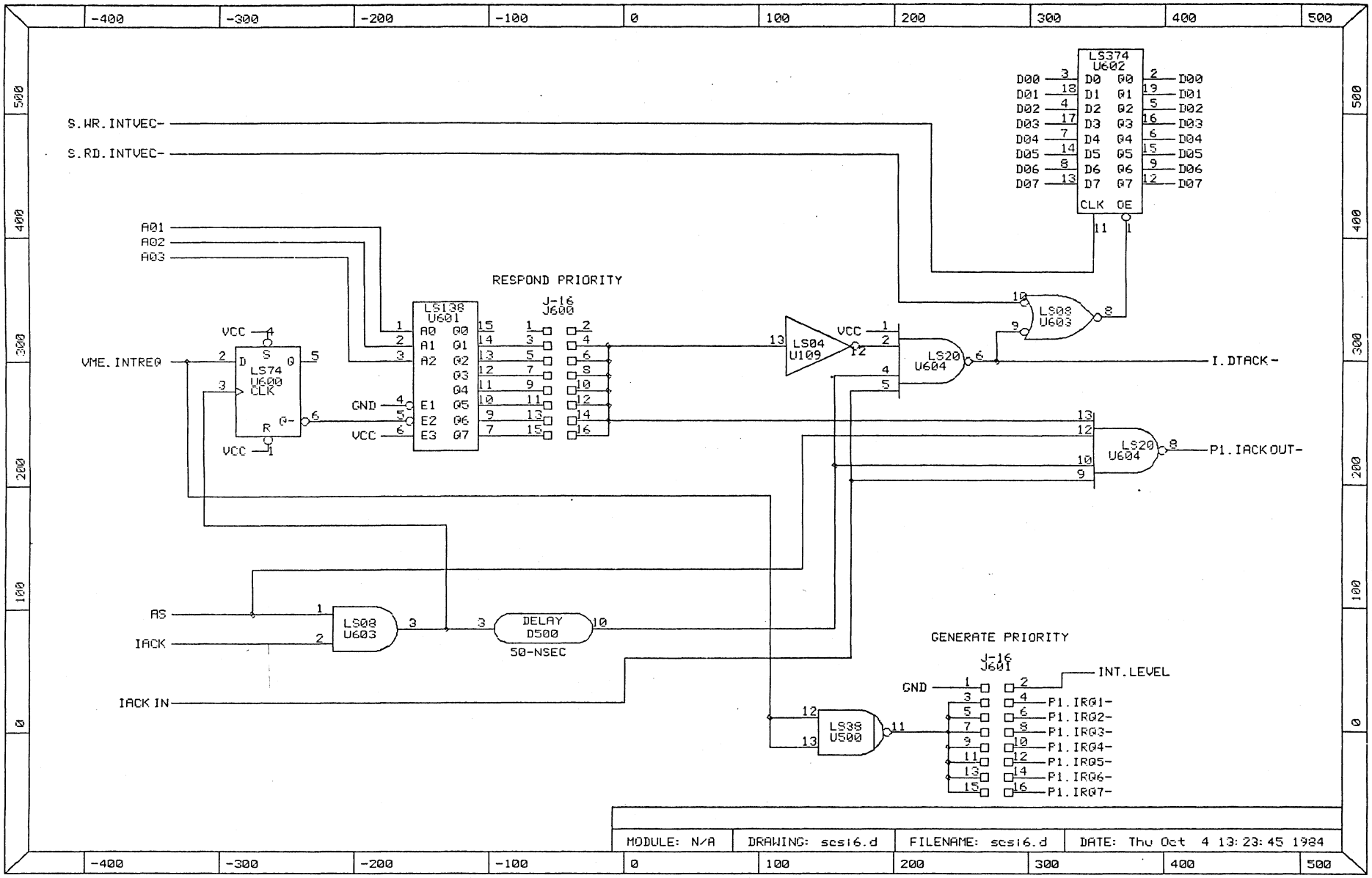

MODULE: N/A	DRAWING: scsi6.d	FILENAME: scsi6.d	DATE: Thu Oct 4 13:23:45 1984

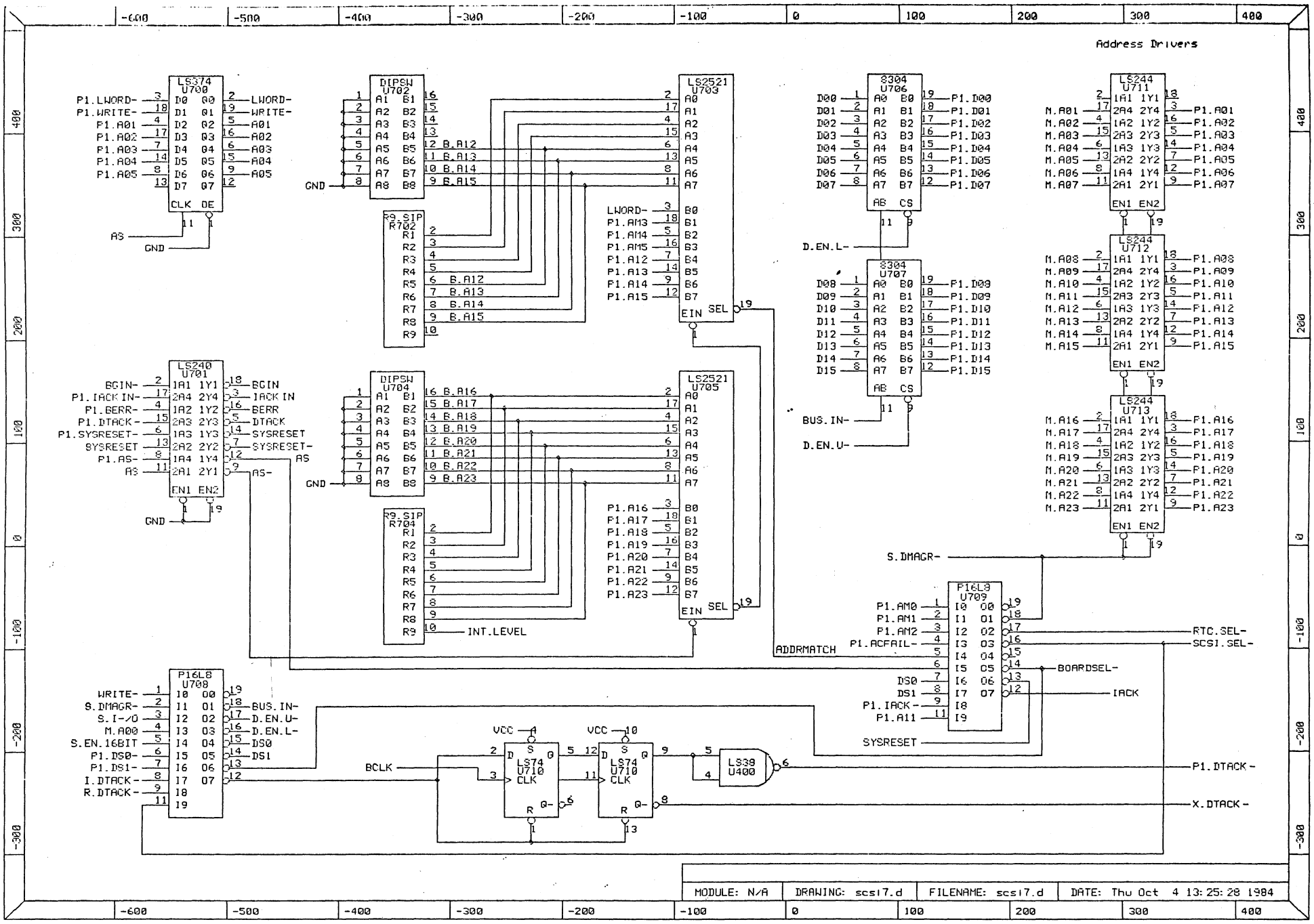
Address Drivers
LS374 U700
P1.LWORD-
P1.WRITE-
P1.A01
P1.A02
P1.A03
P1.A04
P1.A05
LWORD-
WRITE-
A01
A02
A03
A04
A05
AS
GND
DIPSW U702
B.A12
B.A13
B.A14
B.A15
R9.SIP R702
LS2521 U703
LWORD-
P1.AM3
P1.AM4
P1.AM5
P1.A12
P1.A13
P1.A14
P1.A15
EIN
SEL
S304 U706
D00
D01
D02
D03
D04
D05
D06
D07
P1.D00
P1.D01
P1.D02
P1.D03
P1.D04
P1.D05
P1.D06
P1.D07
D.EN.L-
S304 U707
D08
D09
D10
D11
D12
D13
D14
D15
P1.D08
P1.D09
P1.D10
P1.D11
P1.D12
P1.D13
P1.D14
P1.D15
BUS.IN-
D.EN.U-
LS244 U711
M.A01
M.A02
M.A03
M.A04
M.A05
M.A06
M.A07
P1.A01
P1.A02
P1.A03
P1.A04
P1.A05
P1.A06
P1.A07
LS244 U712
M.A08
M.A09
M.A10
M.A11
M.A12
M.A13
M.A14
M.A15
P1.A08
P1.A09
P1.A10
P1.A11
P1.A12
P1.A13
P1.A14
P1.A15
LS244 U713
M.A16
M.A17
M.A18
M.A19
M.A20
M.A21
M.A22
M.A23
P1.A16
P1.A17
P1.A18
P1.A19
P1.A20
P1.A21
P1.A22
P1.A23
S.DMAGR-
LS240 U701
BGIN-
P1.IACK IN-
P1.BERR-
P1.DTACK-
P1.SYSRESET-
SYSRESET
P1.AS-
AS
BGIN
IACK IN
BERR
DTACK
SYSRESET
SYSRESET-
AS-
DIPSW U704
B.A16
B.A17
B.A18
B.A19
B.A20
B.A21
B.A22
B.A23
R9.SIP R704
INT.LEVEL
LS2521 U705
P1.A16
P1.A17
P1.A18
P1.A19
P1.A20
P1.A21
P1.A22
P1.A23
P16L8 U709
P1.AM0
P1.AM1
P1.AM2
P1.ACFAIL-
ADDRMATCH
DS0
DS1
P1.IACK-
P1.A11
SYSRESET
RTC.SEL-
SCSI.SEL-
BOARDSEL-
IACK
P16L8 U708
WRITE-
S.DMAGR-
S.I-/O
M.A00
S.EN.16BIT
P1.DS0-
P1.DS1-
I.DTACK-
R.DTACK-
BUS.IN-
D.EN.U-
D.EN.L-
DS0
DS1
VCC
BCLK
LS74 U710
CLK
LS39 U400
P1.DTACK-
X.DTACK-
MODULE: N/A
DRAWING: scsi7.d
FILENAME: scsi7.d
DATE: Thu Oct 4 13:25:28 1984

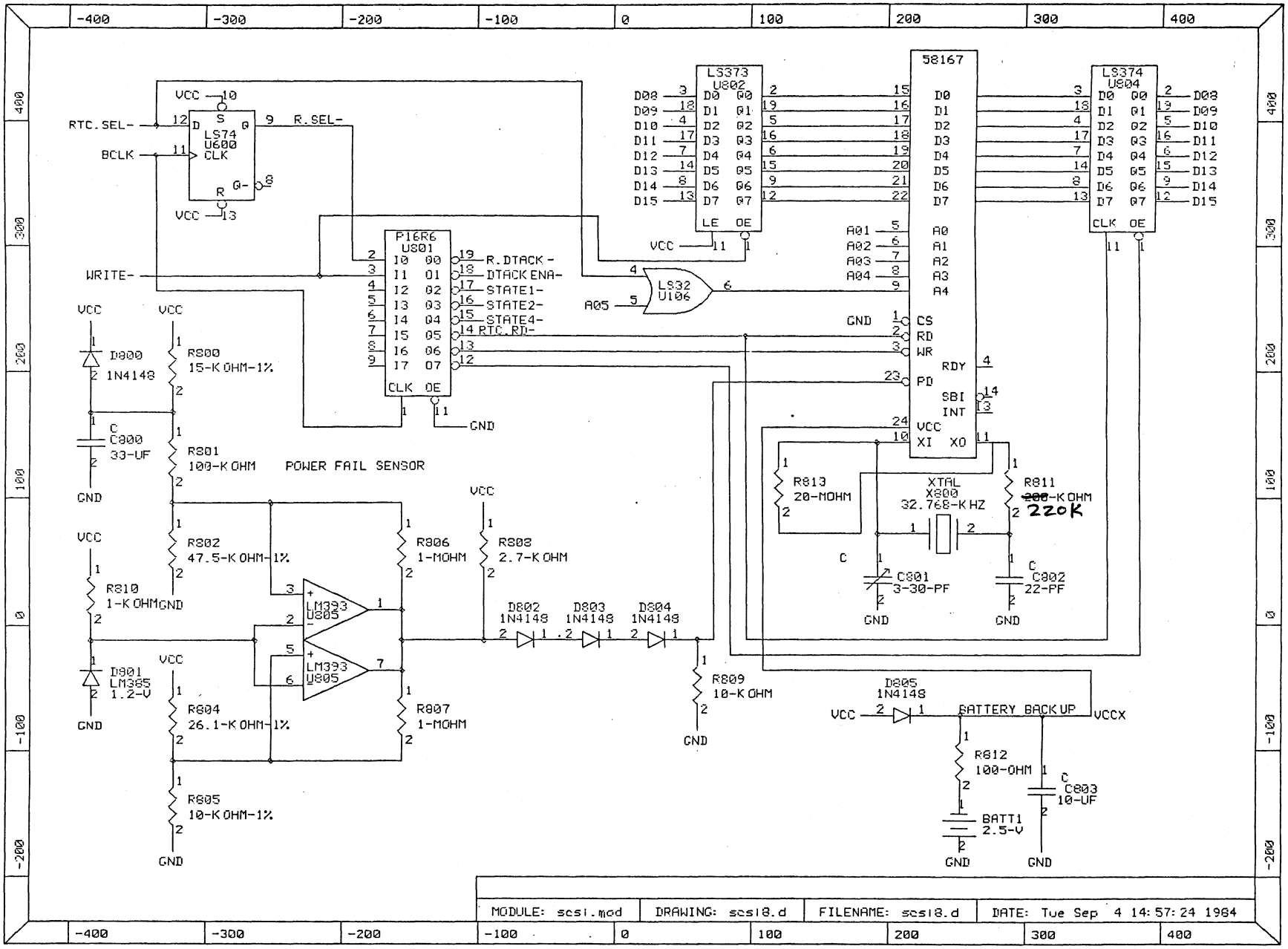
LS74
U600
RTC.SEL-
BCLK
R.SEL-
WRITE-
P16R6
U801
R.DTACK-
DTACK ENA-
STATE1-
STATE2-
STATE4-
RTC.RD-
LS373
U802
LS32
U106
A05
58167
LS374
U804
D08
D09
D10
D11
D12
D13
D14
D15
A01
A02
A03
A04
CS
RD
WR
RDY
PD
SBI
INT
XI
XO
VCC
GND
D800
1N4148
R800
15-K OHM-1%
C
C800
33-UF
R801
100-K OHM
POWER FAIL SENSOR
R802
47.5-K OHM-1%
R810
1-K OHM
D801
LM385
1.2-V
R804
26.1-K OHM-1%
R805
10-K OHM-1%
LM393
U805
R806
1-MOHM
R807
1-MOHM
R808
2.7-K OHM
D802
1N4148
D803
1N4148
D804
1N4148
R809
10-K OHM
R813
20-MOHM
XTAL
X800
32.768-K HZ
R811
~~200~~-K OHM
220K
C801
3-30-PF
C802
22-PF
D805
1N4148
BATTERY BACK UP
VCCX
R812
100-OHM
C803
10-UF
BATT1
2.5-V
MODULE: scsi.mod
DRAWING: scsi8.d
FILENAME: scsi8.d
DATE: Tue Sep 4 14:57:24 1984

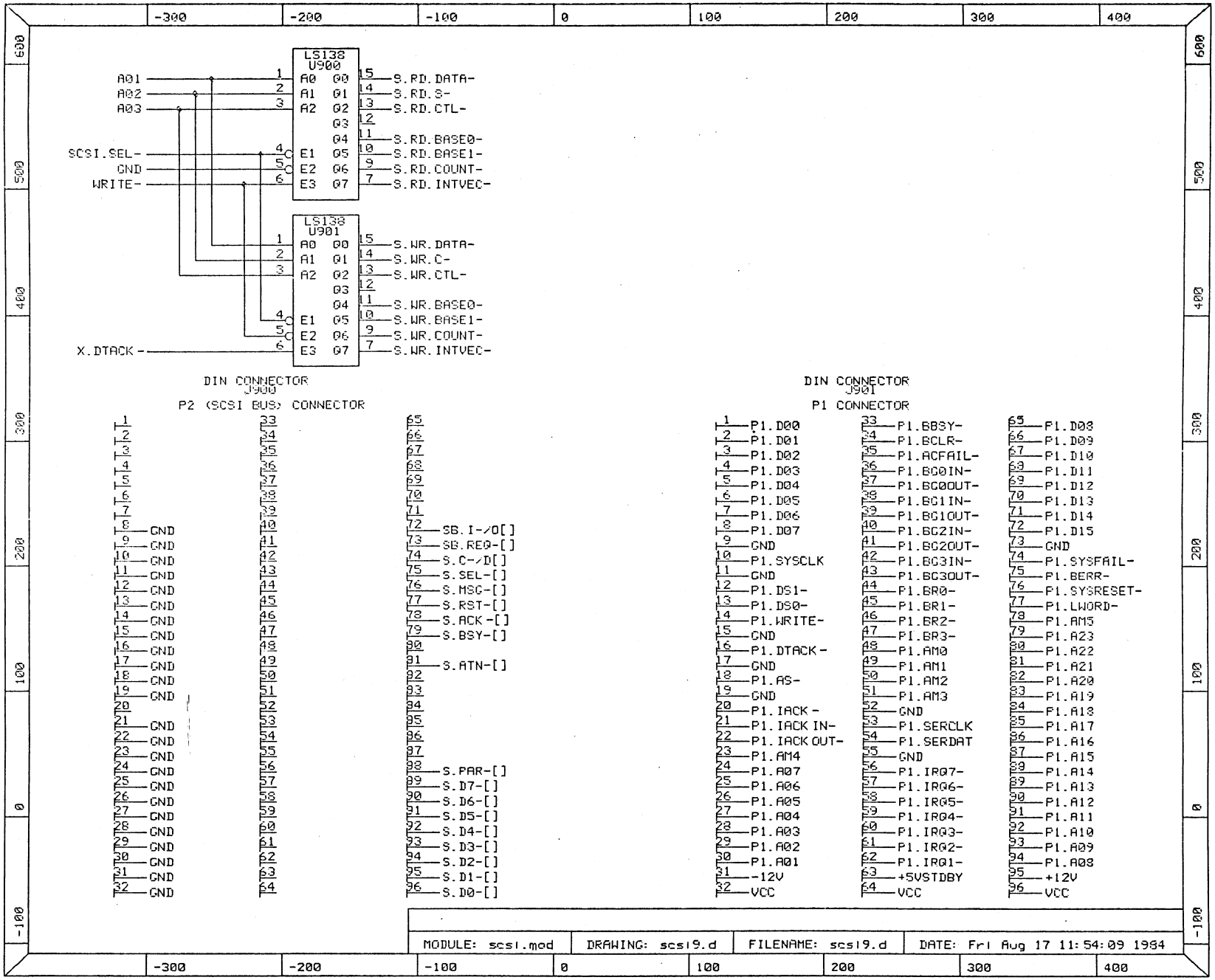
LS138
V900
A01
A02
A03
SCSI.SEL-
GND
WRITE-
A0 Q0 S.RD.DATA-
A1 Q1 S.RD.S-
A2 Q2 S.RD.CTL-
Q3
Q4 S.RD.BASE0-
E1 Q5 S.RD.BASE1-
E2 Q6 S.RD.COUNT-
E3 Q7 S.RD.INTVEC-
LS138
V901
X.DTACK-
A0 Q0 S.WR.DATA-
A1 Q1 S.WR.C-
A2 Q2 S.WR.CTL-
Q3
Q4 S.WR.BASE0-
E1 Q5 S.WR.BASE1-
E2 Q6 S.WR.COUNT-
E3 Q7 S.WR.INTVEC-
DIN CONNECTOR
J900
P2 (SCSI BUS) CONNECTOR
8 GND
9 GND
10 GND
11 GND
12 GND
13 GND
14 GND
15 GND
16 GND
17 GND
18 GND
19 GND
21 GND
22 GND
23 GND
24 GND
25 GND
26 GND
27 GND
28 GND
29 GND
30 GND
31 GND
32 GND
72 SB.I-/O[]
73 SB.REQ-[]
74 S.C-/D[]
75 S.SEL-[]
76 S.MSG-[]
77 S.RST-[]
78 S.ACK-[]
79 S.BSY-[]
81 S.ATN-[]
88 S.PAR-[]
89 S.D7-[]
90 S.D6-[]
91 S.D5-[]
92 S.D4-[]
93 S.D3-[]
94 S.D2-[]
95 S.D1-[]
96 S.D0-[]
DIN CONNECTOR
J901
P1 CONNECTOR
1 P1.D00
2 P1.D01
3 P1.D02
4 P1.D03
5 P1.D04
6 P1.D05
7 P1.D06
8 P1.D07
9 GND
10 P1.SYSCLK
11 GND
12 P1.DS1-
13 P1.DS0-
14 P1.WRITE-
15 GND
16 P1.DTACK-
17 GND
18 P1.AS-
19 GND
20 P1.IACK-
21 P1.IACK IN-
22 P1.IACK OUT-
23 P1.AM4
24 P1.A07
25 P1.A06
26 P1.A05
27 P1.A04
28 P1.A03
29 P1.A02
30 P1.A01
31 -12V
32 VCC
33 P1.BBSY-
34 P1.BCLR-
35 P1.ACFAIL-
36 P1.BG0IN-
37 P1.BG0OUT-
38 P1.BG1IN-
39 P1.BG1OUT-
40 P1.BG2IN-
41 P1.BG2OUT-
42 P1.BG3IN-
43 P1.BG3OUT-
44 P1.BR0-
45 P1.BR1-
46 P1.BR2-
47 P1.BR3-
48 P1.AM0
49 P1.AM1
50 P1.AM2
51 P1.AM3
52 GND
53 P1.SERCLK
54 P1.SERDAT
55 GND
56 P1.IRQ7-
57 P1.IRQ6-
58 P1.IRQ5-
59 P1.IRQ4-
60 P1.IRQ3-
61 P1.IRQ2-
62 P1.IRQ1-
63 +5VSTDBY
64 VCC
65 P1.D08
66 P1.D09
67 P1.D10
68 P1.D11
69 P1.D12
70 P1.D13
71 P1.D14
72 P1.D15
73 GND
74 P1.SYSFAIL-
75 P1.BERR-
76 P1.SYSRESET-
77 P1.LWORD-
78 P1.AM5
79 P1.A23
80 P1.A22
81 P1.A21
82 P1.A20
83 P1.A19
84 P1.A18
85 P1.A17
86 P1.A16
87 P1.A15
88 P1.A14
89 P1.A13
90 P1.A12
91 P1.A11
92 P1.A10
93 P1.A09
94 P1.A08
95 +12V
96 VCC
MODULE: scsi.mod
DRAWING: scsi9.d
FILENAME: scsi9.d
DATE: Fri Aug 17 11:54:09 1984